GPU Rendering in Rhea and Titan

Benjamin Hernandez

Advanced Data and Workflows Group

OAK RIDGE National Laboratory

GPU Rendering in OLCF

- For traditional or custom applications that uses intensively the GPU for visualization, OLCF supports VirtualGL/TurboVNC.
- So if you have software or a custom visualization tool you can take advantage of this feature.
- ParaView implement their own mechanism for delivering frames to the user's desktop through a client-server architecture.

OAK RIDGE National Laboratory

GPU Rendering in OLCF

- Traditional X-forwarding.

```
ssh -X user@titan.ccs.ornl.gov
```

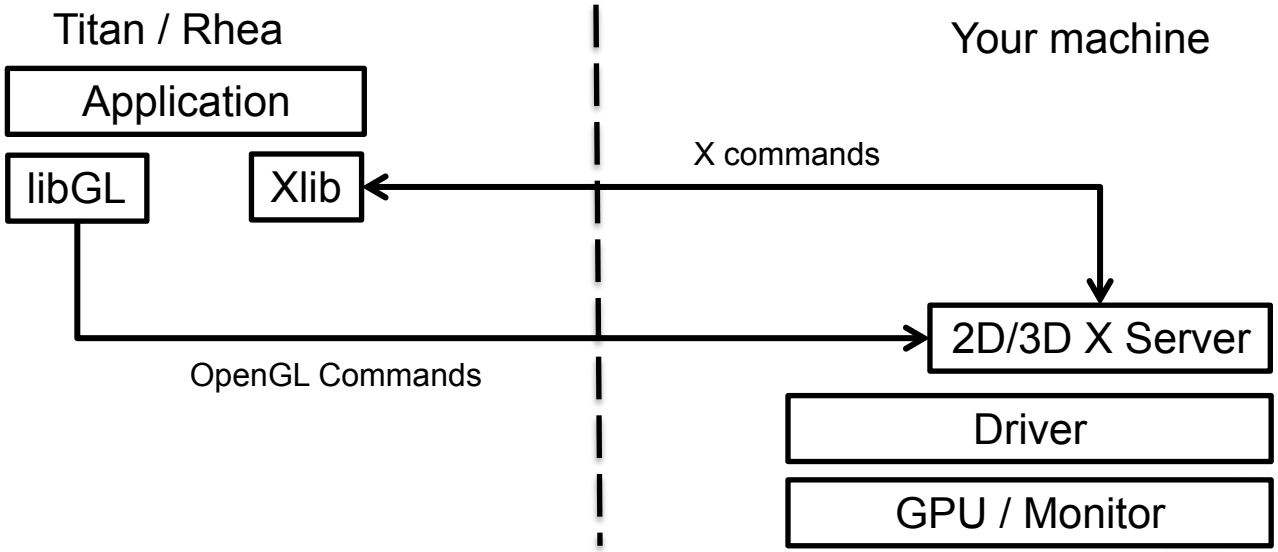

- GPU based rendering is quite different to X forwarding

OAK RIDGE National Laboratory

GPU Rendering in OLCF

- What about NoMachine's NX ?
  - It uses X compression
  - But do not take advantage of remote GPUs

OAK RIDGE National Laboratory

VirtualGL/TurboVNC

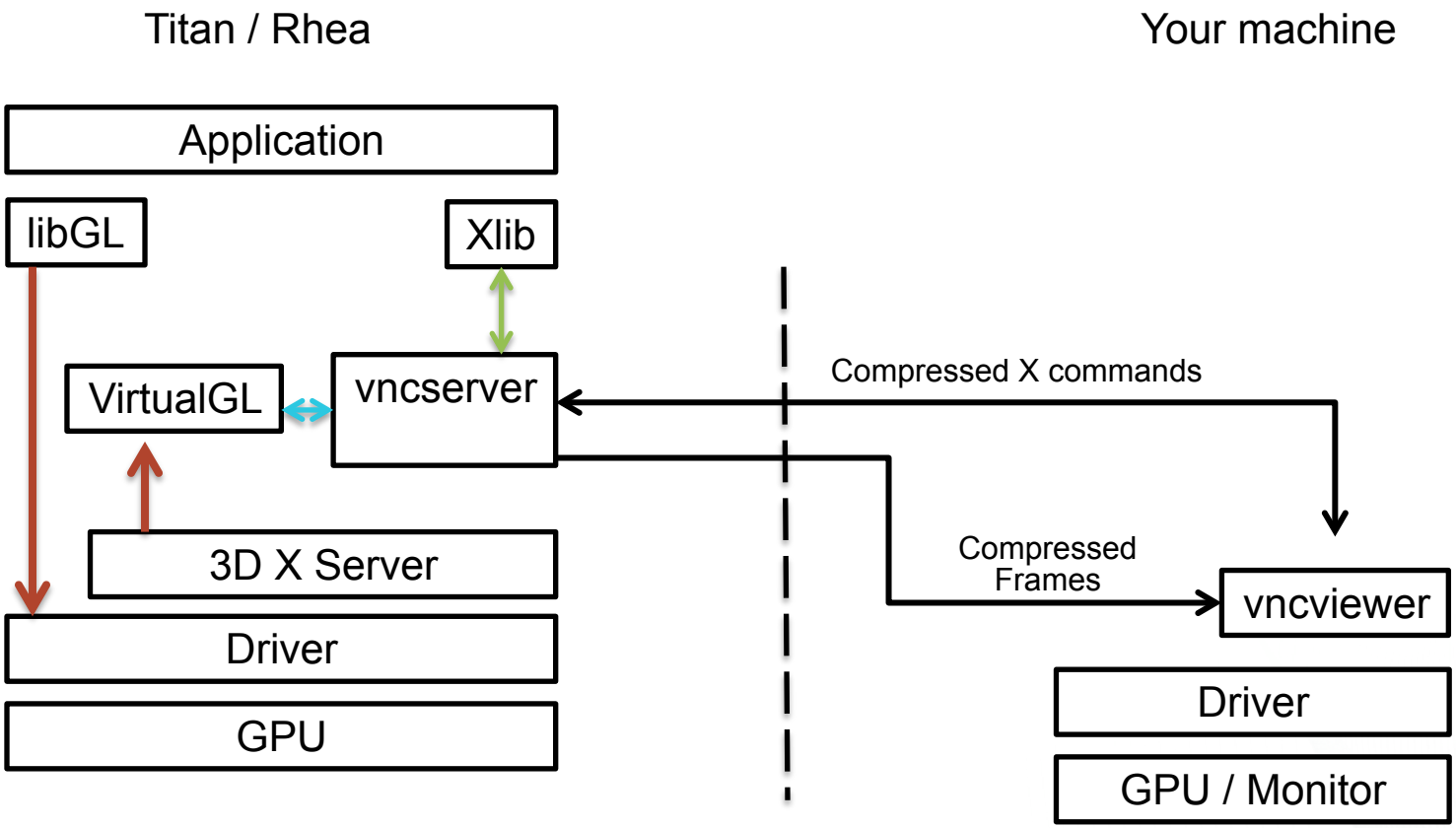

Oak Ridge National Laboratory

Prerequisites

- You'll need to have turboVNC installed on your machine.
- TurboVNC uses 59XX ports for tunneling
- You'll need to open 3 Terminals

OAK RIDGE National Laboratory

Specs

Titan

- 16 600+ nodes
- 16 600+ K20, 6GB
- 32 GB RAM
- 16 CPU Cores, 2.2 GHz

Rhea (Analysis Cluster)

- 512 nodes
- 9 Fat nodes:
  - 2x NV K80, 24 GB
  - 1 TB RAM
  - 2x CPU 28 Cores 2.3GHz

OAK RIDGE National Laboratory

GPU Rendering on Rhea Terminal 1:

- Login to Rhea using login 5 node

```
ssh user@rhea-login5.ccs.ornl.gov
```

- Submit an interactive job in the GPU partition

```
qsub -I  -lnodes=1,walltime=01:00:00,partition=gpu -A abc123
```

- Launch x-server

```
xinit&
```

- Launch the vncserver

```
vncserver  :1  -geometry  1900x1000  -depth  24
```

display — window size — color depth

- Check where is running the vnc server, e.g.

```
New 'rhea-gpu3:1 (user)'  desktop is rhea-gpu3
```

- Type

```
export DISPLAY=:1
```


OAK RIDGE National Laboratory

GPU Rendering on Rhea

Terminal 2:

- We will open a tunneling connection to the node running vncserver, in this case rhea-gpu3 through rhea-login5

```
ssh  user@rhea-login5.ccs.ornl.gov -L 5901:rhea-gpu3:5901
```

Terminal 3:

- In your machine run VNC viewer using the tunneling port

```
vncviewer -medqual localhost:5901
```


OAK RIDGE National Laboratory

GPU Rendering on Titan
Terminal 1:

- Login to Titan and allocate compute resources through the batch system

```
qsub -I -lnodes=1 -lwalltime=01:00:00 -Aabc123
```

- From within the batch job, set-up the environment

```
module load GPU-render
```

- After loading the module, you'll see the node name where is running your job, e.g.

```
nid02410
```

- From within the batch job, run a script on the compute nodes that starts X and runs a test.

```
aprun -n $PBS_NUM_NODES  $MEMBERWORK/abc123/job.sh
```


OAK RIDGE National Laboratory

GPU Rendering on Titan Interactive Job

```
#!/bin/sh
startx &
sleep 5
starttvnc :1 &
export DISPLAY=:1
vglrun –np 4 ./yourapp
```


OAK RIDGE National Laboratory

GPU Rendering on Titan

Terminal 2:

- We will open a tunneling connection to the node running vncserver, in this case `nid02410` through titan-internal

```
ssh user@titan-internal.ccs.ornl.gov -L 5901:nid02410:5901
```

Terminal 3:

- In your machine run VNC viewer using the tunneling port

```
vncviewer -medqual localhost:5901
```


OAK RIDGE National Laboratory

More Info. and help

https://www.olcf.ornl.gov/kb_articles/gpu-rendering-on-titan/

help@olcf.ornl.gov

Thanks!

OAK RIDGE National Laboratory